Single
Packs

Single Pack SC12CL 220-240V 50Hz CSIR

Single pack code number: **195B4084**

Position	Title	Code	Amount
1	Compressor SC12CL	104L2623	1
2	Starting relay	117U6005	1
3	Starting capacitor (80µF 220V, 6.3mm)	117U5017	1
4	Cord relief	103N1004	1
5	Cover	103N2009	1
6	Bolt joint for one compressor | M6 | ø16mm	118-1917	1

Secop GmbH • Lise-Meitner-Straße 29 • 24941 Flensburg, Germany • Tel: +49 461 4941 0 • **www.secop.com**

Secop accepts no responsibility for possible errors in catalogs, brochures, and other printed material. Secop reserves the right to alter its products without notice. This also applies to products already on order provided that such alterations can be made without subsequential changes being necessary to specifications already agreed. All trademarks in this material are the property of the respective companies. Secop and the Secop logotype are trademarks of Secop GmbH. All rights reserved.

Model
SC12CL

Sales code:
104L2623

Compressor Data

Refrigerant(s)	**R404A / R452A / R507**
Refr. charge - tech. limit	**1300g / 45.86oz**
Weight	**13.10 kg / 28.88lbs**
Displacement	**12.87 cm3 / 0.79cu.in**
Compressors on pallet	**80**



General – Configurations With SC12CL

–	**Conf. 1**	**Conf. 2**
Motor configuration	CSIR	CSIR
Power supply (nominal)	220-240 V/50 Hz	220-240 V/50 Hz
Number of phases	1	1
Voltage range	198-254 V	198-254 V
Approvals	VDE, CCC, EAC	VDE, CCC
Starting torque	HST	HST
Refrigerant	R404A	R452A
Application	LBP	LBP
Hot gas defrost	OK	OK
Long interval pull down	OK	OK

Application Notes

- Provision for PE Grounding is located at the PE Stamp on the compressor

Model
SC12CL

Sales code:
104L2623

Compressor Design

Oil type	**POE**	Winding resistance main	**5.13 Ohm**
Oil viscosity	**32cSt**	Winding resistance aux	**13.51 Ohm**
Oil quantity	**550 / 18.60fl.oz**	Max. winding temp.	**125 °C**
Free gas volume comp.	**1,460 cm3 / 49.37fl.oz**	Max. discharge temp.	**135°C / 275°F**
Motor protection	**internal**		

Compressor Dimensions

Housing

A Height	**209mm / 8.23in**
B Height	**203mm / 7.99in**
C Length shell	**218mm / 8.58in**
D Length w. cover	**255mm / 10.04in**
E Width	**151mm / 5.94in**

Find 3D Model here

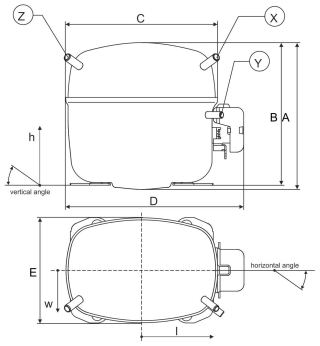

Connectors	Suction X	Discharge Y	Process Z
Diameter [mm]	øi 8.11–8.29 / 0.32–0.33in	øi 6.11–6.29 / 0.24–0.25in	øi 6.11–6.29 / 0.24–0.25in
Material	CU	CU	CU
Horizontal angle ±2°	37°	37°	143°
Vertical angle ±2°	30°	0°	150°
Position l/h/w [mm]	107/183/55 / 4.21/7.20/2.17in	115/100/63 / 4.53/3.94/2.48in	-107/183/55 / -4.21/7.20/2.17in
Straight tube l. [mm]	12 / 0.47in	12 / 0.47in	12 / 0.47in

Mounting Accessories

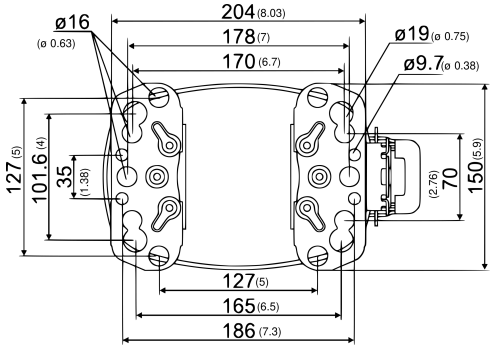

Dimensions in mm [in]

Bolt joint

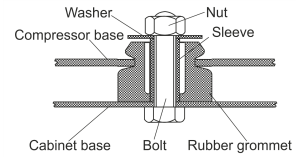

Snap-on

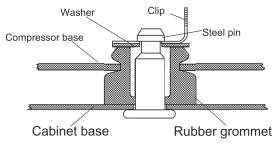

	one comp.	multi pack
Bolt joint | M6 | ø16mm	118-1917	118-1918
Bolt joint | ø1/4" | ø16mm	118-1946	–
Bolt joint | ø1/4" | ø19mm	118-1949	–
Snap-on | ø7,3 | ø16mm	118-1947	118-1919

Model
SC12CL Configuration 1

Sales code:
104L2623

Configuration

Motor configuration	**CSIR**
Power supply (nominal)	**220-240 V/50 Hz 1~**
Refrigerant	**R404A**
Application	**LBP**
Voltage range	**198-254 V**
Starting torque	**HST**
Approvals	**VDE, CCC, EAC**
Starting device type	**relay**
Run capacitor	**-/-**
Start capacitor	**80 µF**
LRA (locked rotor amps / 4s/ U(N))	**23.4 A**
RLA (rated load amps / 1s/ U(N))	**4.3 A**
Cut in current (U(N))	**23.4 A**

Ambient/ machine room temperatures minimum /maximum
Ambient temperature range: 10 - 38°C / 50 - 100°F
Machine room temp. compressor: 10 - 43°C / 50 - 109°F

System Cooling
fan 3m/s

Electrical Accessories / Wiring Diagram

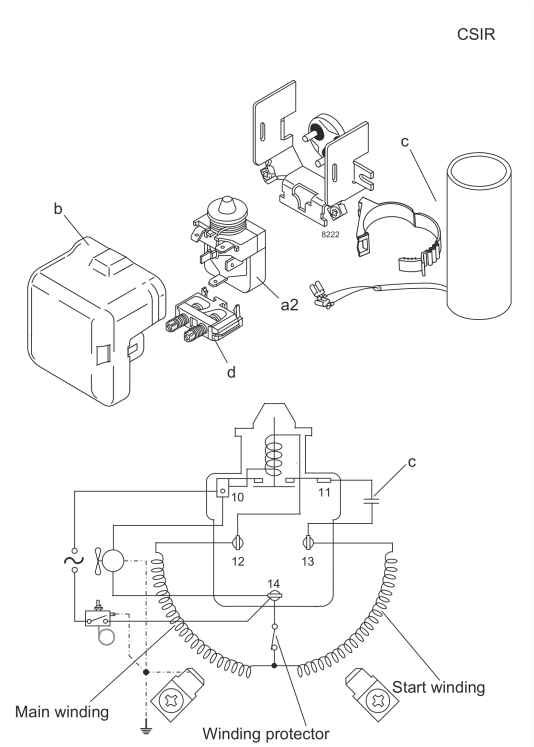

View full size

Components
a2 relay 117U6005
c start capacitor (80µF) 117U5017
d cord relief 103N1004
b plastic cover 103N2009

Operation Pressure Range

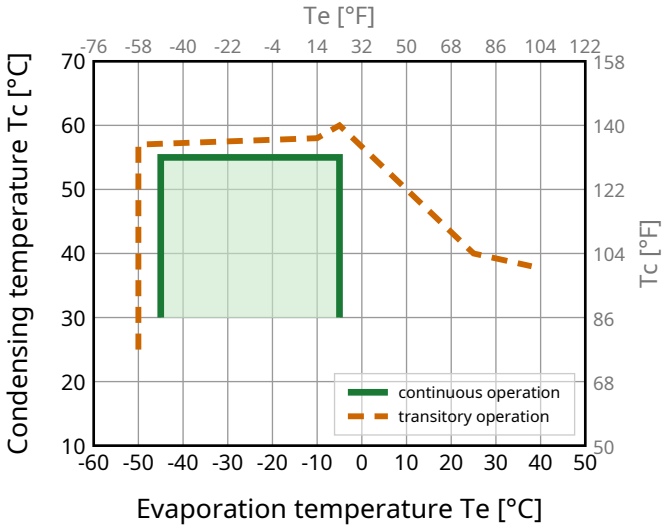

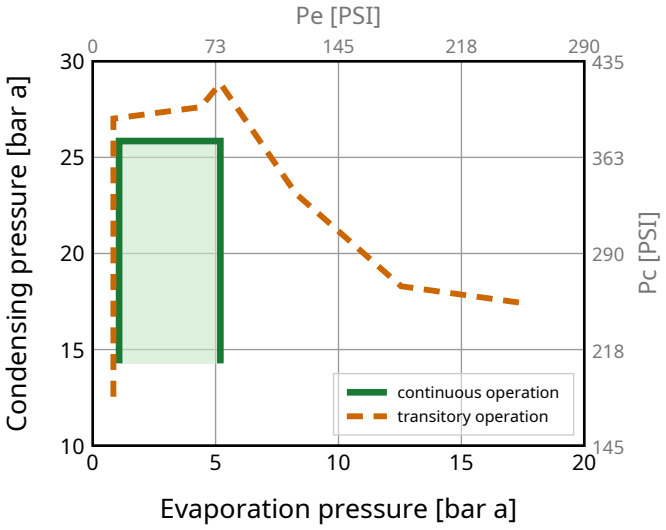

Model
SC12CL Configuration 1

Sales code:
104L2623

Standard Conditions

R404A, 220 V/50 Hz, CSIR, fan 3m/s

pe	pc	RGT	Tliq	Cooling capacity			COP	EER	P	I	ṁ	
[°C] [°F]	[°C] [°F]	[°C] [°F]	[°C] [°F]	[W]	[Btu/h]	[kcal/h]	[W/W]	[Btu/Wh]	[W]	[A]	[kg/h]	
-23.3 -10	54.4 129.9	32.2 90	32.2 90	**516**	1761	444	**1.10**	3.75	469	2.90	12.00	**ASHRAE LBP**
-25 -13	55 131	32 89.6	55 131	**336**	1146	289	**0.76**	2.59	443	2.80	10.47	**CECOMAF LBP**
-35 -31	40 104	20 68	40 104	**279**	953	240	**0.87**	2.97	322	2.43	7.57	**EN12900 LBP**
-23.3 -10	48.8 119.8	4.4 39.9	48.8 119.8	**412**	1407	355	**0.88**	3.00	469	2.91	14.55	**ARI540 LBP**
-23.3 -10	40.6 105.1	32.2 90	32.2 90	**667**	2275	573	**1.44**	4.92	462	2.87	15.50	**AHAM LBP**
-35 -31	45 113	32 89.6	45 113	**239**	815	205	**0.76**	2.58	315	2.43	6.37	**opt LBP**

Performance Tables

R404A, 220 V/50 Hz, CSIR, fan 3m/s

pc= 45/113 | RGT= 32/89.6 | Tliq= 45/113 | °C/°F

pe		Cooling capacity			COP	EER	P	I	ṁ
[°C]	[°F]	[W]	[Btu/h]	[kcal/h]	[W/W]	[Btu/Wh]	[W]	[A]	[kg/h]
-45	-49	**78**	268	67	**0.41**	1.40	192	2.15	2.08
-40	-40	**149**	507	128	**0.59**	2.00	253	2.27	3.95
-30	-22	**351**	1196	302	**0.93**	3.16	379	2.61	9.39
-20	-4	**646**	2203	555	**1.26**	4.31	511	3.06	17.48
-10	14	**1047**	3573	901	**1.60**	5.46	654	3.64	28.79
-5	23	**1292**	4408	1111	**1.77**	6.03	730	3.97	35.86

pc= 55/131 | RGT= 32/89.6 | Tliq= 55/131 | °C/°F

-45	-49	**22**	76	19	**0.15**	0.51	148	1.98	0.68
-40	-40	**71**	243	61	**0.32**	1.10	220	2.14	2.19
-30	-22	**226**	772	195	**0.62**	2.10	367	2.55	7.02
-20	-4	**469**	1600	403	**0.90**	3.07	521	3.08	14.72
-10	14	**812**	2771	698	**1.19**	4.05	685	3.73	25.96
-5	23	**1026**	3500	882	**1.33**	4.53	772	4.09	33.16

Model
SC12CL Configuration 2

Sales code:
104L2623

Configuration

Motor configuration	**CSIR**
Power supply (nominal)	**220-240 V/50 Hz 1~**
Refrigerant	**R452A**
Application	**LBP**
Voltage range	**198-254 V**
Starting torque	**HST**
Approvals	**VDE, CCC**
Starting device type	**relay**
Run capacitor	**-/-**
Start capacitor	**80 µF**
LRA (locked rotor amps / 4s/ U(N))	**16.2 A**
RLA (rated load amps / 1s/ U(N))	**3.1 A**
Cut in current (U(N))	**16.2 A**

Ambient/ machine room temperatures minimum /maximum
Ambient temperature range: 10 - 38°C / 50 - 100°F
Machine room temp. compressor: 10 - 43°C / 50 - 109°F

System Cooling
fan 3m/s

Electrical Accessories / Wiring Diagram

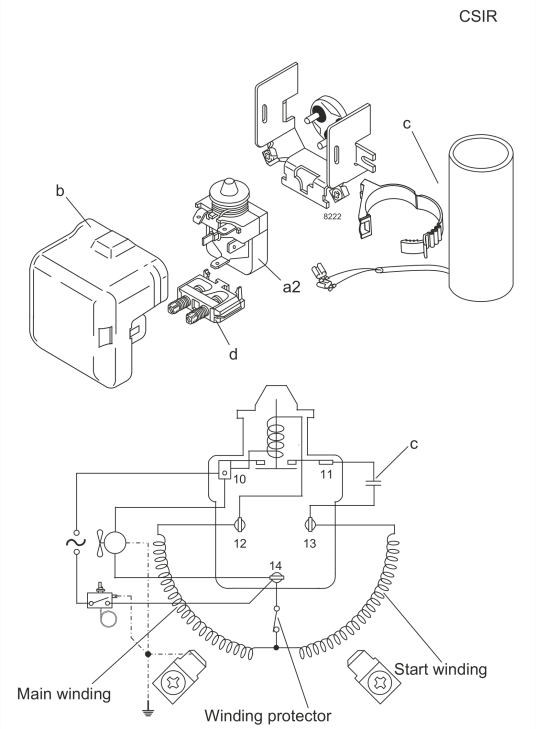

View full size

Components
a2 relay 117U6005
c start capacitor (80µF) 117U5017
d cord relief 103N1004
b plastic cover 103N2009

Operation Pressure Range

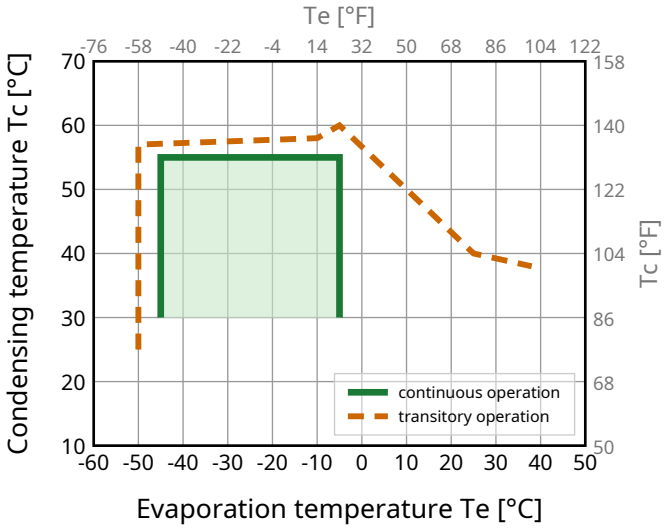

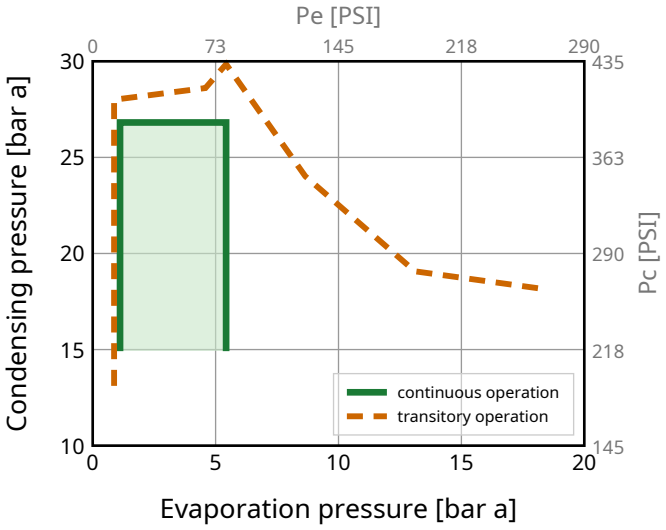

Model
SC12CL Configuration 2

Sales code:
104L2623

Standard Conditions

R452A, 220 V/50 Hz, CSIR, fan 3m/s

pe	pc	RGT	Tliq	Cooling capacity			COP	EER	P	I	ṁ	
[°C] [°F]	[°C] [°F]	[°C] [°F]	[°C] [°F]	[W]	[Btu/h]	[kcal/h]	[W/W]	[Btu/Wh]	[W]	[A]	[kg/h]	
-23.3 -10	54.4 129.9	32.2 90	32.2 90	**468**	1597	403	**1.08**	3.69	433	2.88	11.33	**ASHRAE LBP**
-25 -13	55 131	32 89.6	55 131	**305**	1039	262	**0.75**	2.56	407	2.78	9.83	**CECOMAF LBP**
-35 -31	40 104	20 68	40 104	**246**	840	212	**0.84**	2.87	293	2.37	6.93	**EN12900 LBP**
-23.3 -10	48.8 119.8	4.4 39.9	48.8 119.8	**378**	1289	325	**0.87**	2.97	434	2.88	13.79	**ARI540 LBP**
-23.3 -10	40.6 105.1	32.2 90	32.2 90	**610**	2081	524	**1.42**	4.83	431	2.87	14.76	**AHAM LBP**
-35 -31	45 113	32 89.6	45 113	**209**	712	179	**0.73**	2.49	286	2.35	5.78	**opt LBP**

Performance Tables

R452A, 220 V/50 Hz, CSIR, fan 3m/s

pc= 45/113 | RGT= 32/89.6 | Tliq= 45/113 | °C/°F

pe		Cooling capacity			COP	EER	P	I	ṁ
[°C]	[°F]	[W]	[Btu/h]	[kcal/h]	[W/W]	[Btu/Wh]	[W]	[A]	[kg/h]
-45	-49	**60**	206	52	**0.36**	1.22	168	1.92	1.66
-40	-40	**125**	426	107	**0.55**	1.88	226	2.13	3.44
-30	-22	**314**	1071	270	**0.90**	3.08	347	2.57	8.73
-20	-4	**595**	2030	512	**1.25**	4.25	478	3.04	16.73
-10	14	**983**	3354	845	**1.58**	5.41	620	3.55	28.07
-5	23	**1221**	4167	1050	**1.75**	5.98	697	3.83	35.21

pc= 55/131 | RGT= 32/89.6 | Tliq= 55/131 | °C/°F

-45	-49	**15**	53	13	**0.12**	0.41	127	1.77	0.49
-40	-40	**58**	199	50	**0.30**	1.03	193	2.01	1.86
-30	-22	**201**	686	173	**0.60**	2.06	333	2.52	6.45
-20	-4	**432**	1473	371	**0.89**	3.05	483	3.06	14.03
-10	14	**765**	2609	658	**1.18**	4.03	647	3.65	25.27
-5	23	**974**	3323	837	**1.32**	4.52	735	3.96	32.55

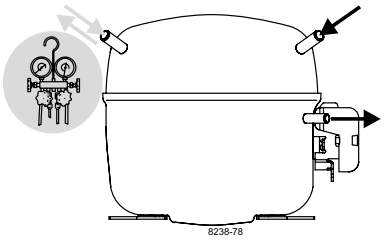

SC Compressors

SECOP

Keep electrical equipment clear from oil, chemicals, and water

When operated with a flammable refrigerant, only spark-proof starting equipment is allowed.

RSIR

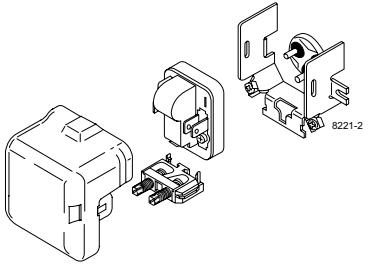

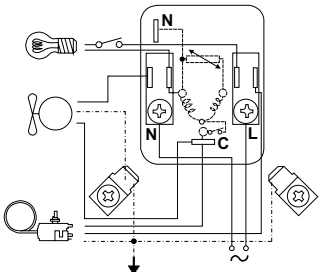

CSIR

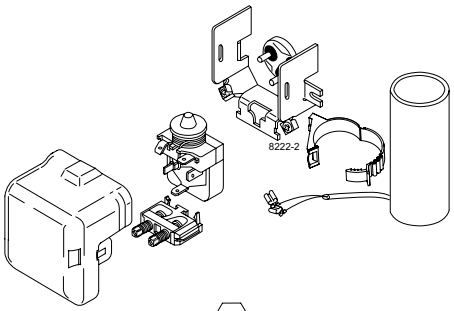

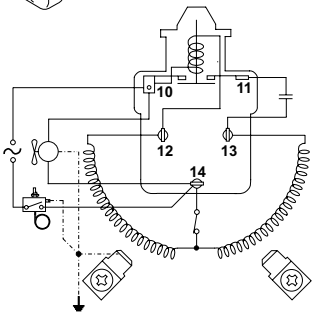

CSCR

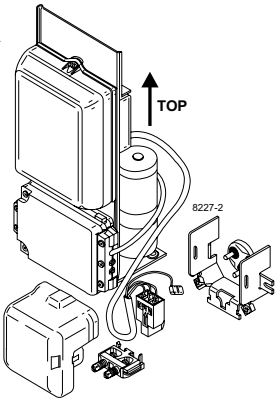

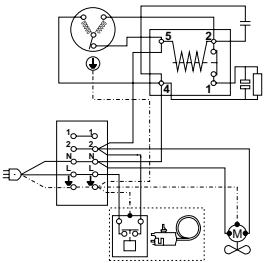

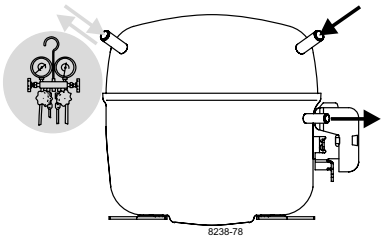

SC Compressors

SECOP

Keep electrical equipment clear from oil, chemicals, and water

When operated with a flammable refrigerant, only spark-proof starting equipment is allowed.

Service/Repair – R290, R600a, R170, R1270, R1234yf

(applies to all flammable refrigerants)

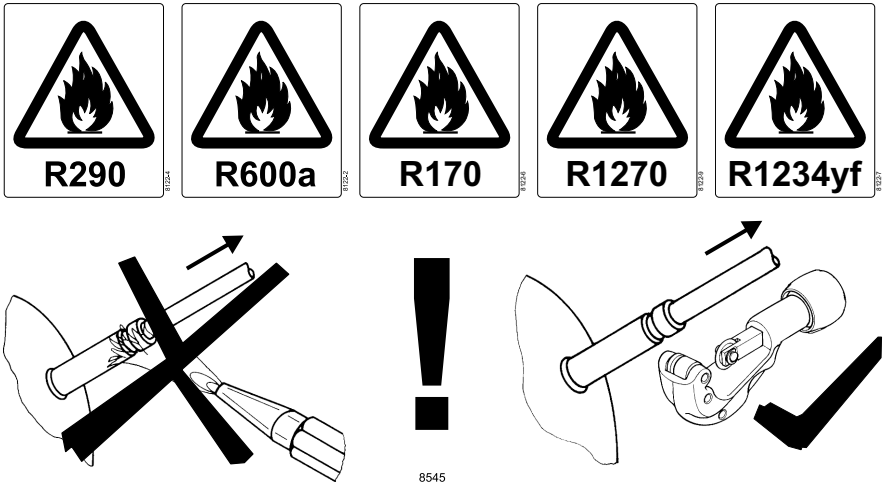

CSCR

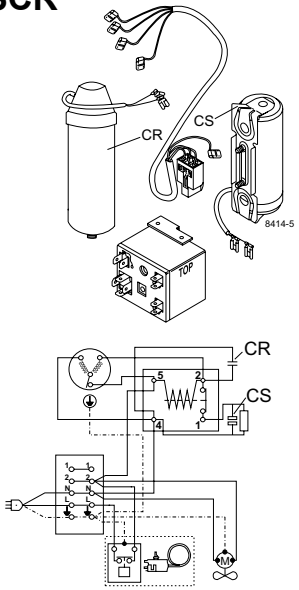

Dismantling, recycling, disposal: At the end of a compressor's lifecycle, proceed by separating and storing components according to their environmental impact. Parts that may cause pollution must be clearly identified and handled separately, ensuring appropriate disposal. Refrigerant gas must not be released into the environment and should be recovered by qualified operators. Compressor oil must also be collected separately. The compressor should be disposed of at specialized disposal centers in accordance with the applicable regulations. **Subject to modifications/alterations. www.secop.com**